MANUAL REWIND HOSE REEL 1-1/2", CARBON STEEL

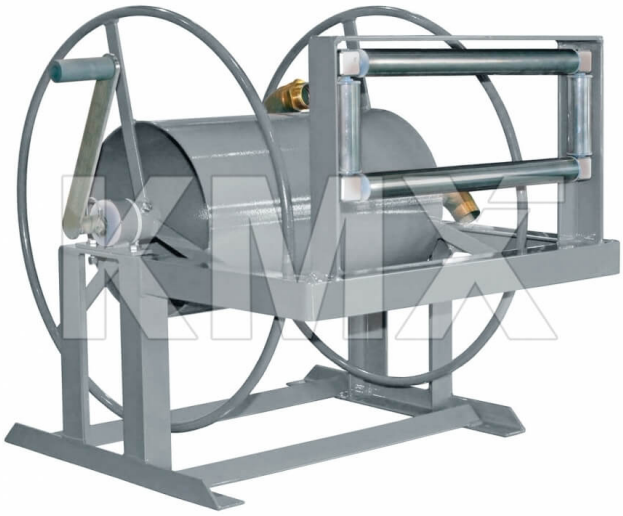

** Imágenes referenciales*
*** Algunas características pueden variar sin previo aviso, venta sujeta a stock disponible*

FECHA
: 11/24/2026 01:19 AM

SKU
: 15231

MARCA
: DIXON VALVE

MODELO
: HDR150-100GACC

Specifications:
Maximum working water pressure 200 PSI

Features:
Made in USA
Friction brake
Left hand inlet
Red hose reel cover (hose not included)
Natural, galvanized finish or red powder coated

Construction:
Reel and frame: heavy duty welded carbon steel
Reel and frame: hot dipped galvanized
Waterway: brass and stainless steel
Hardware: 316L stainless steel
Bearings: greaseless polyethylene

Available Options:
24" stand
Inlet: brass 1½" FNPT straight swivel inlet
Manual rewind hand crank (stainless steel w/polyethylene handle)
Right hand inlet
Hose roller assembly (aluminum or stainless steel brackets)
1½" non-collapsible UVX hose (up to 150')
Custom colors available; contact Dixon®

Safety notes: WARNING: Cancer and Reproductive Harm- www.P65Warnings.ca.gov

2645 Executive Park Drive, Weston, Fort Lauderdale, FL 33331, EEUU
sales@kmxusa.us
www.kmxusa.us

ESPECIFICACIONES TÉCNICAS

Factory Part Number	HDR150-100GACC
Inlet	Brass 1-1/2" MNPT 90° swivel
Outlet	Brass 1½" MNST gooseneck
Description	Hose roller assembly (aluminum), hand crank, galvanized finish

KMX
2645 Executive Park Drive, Weston, Fort Lauderdale, FL 33331, EEUU
sales@kmxusa.us
www.kmxusa.us